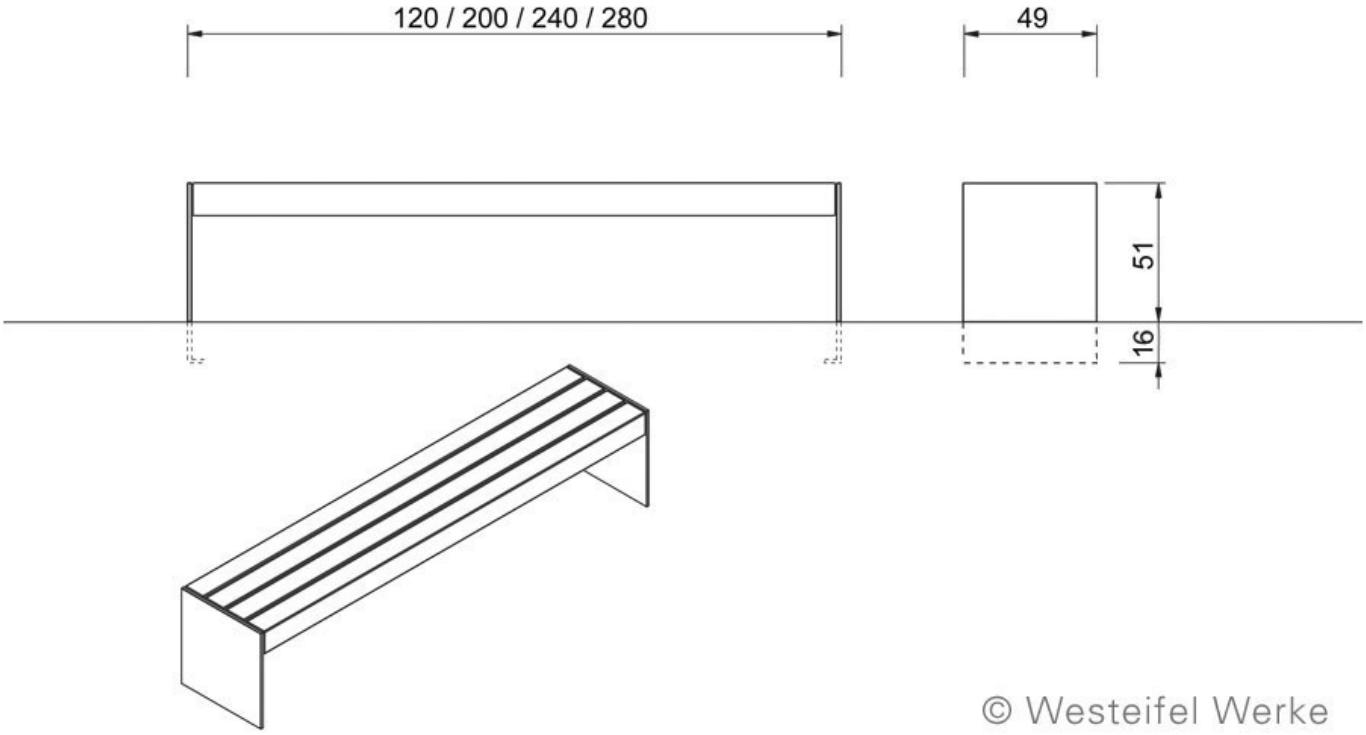

Caption:

Description:

Dimensions: 900 x 500

aperture: 0
credit:
camera:
caption:
created_timestamp: 0
copyright:
focal_length: 0
iso: 0
shutter_speed: 0
title: Z-Versio_Matrix-HoBa-100-corpus